TECHNICAL DATA

ES/EV Actuator Dimensions

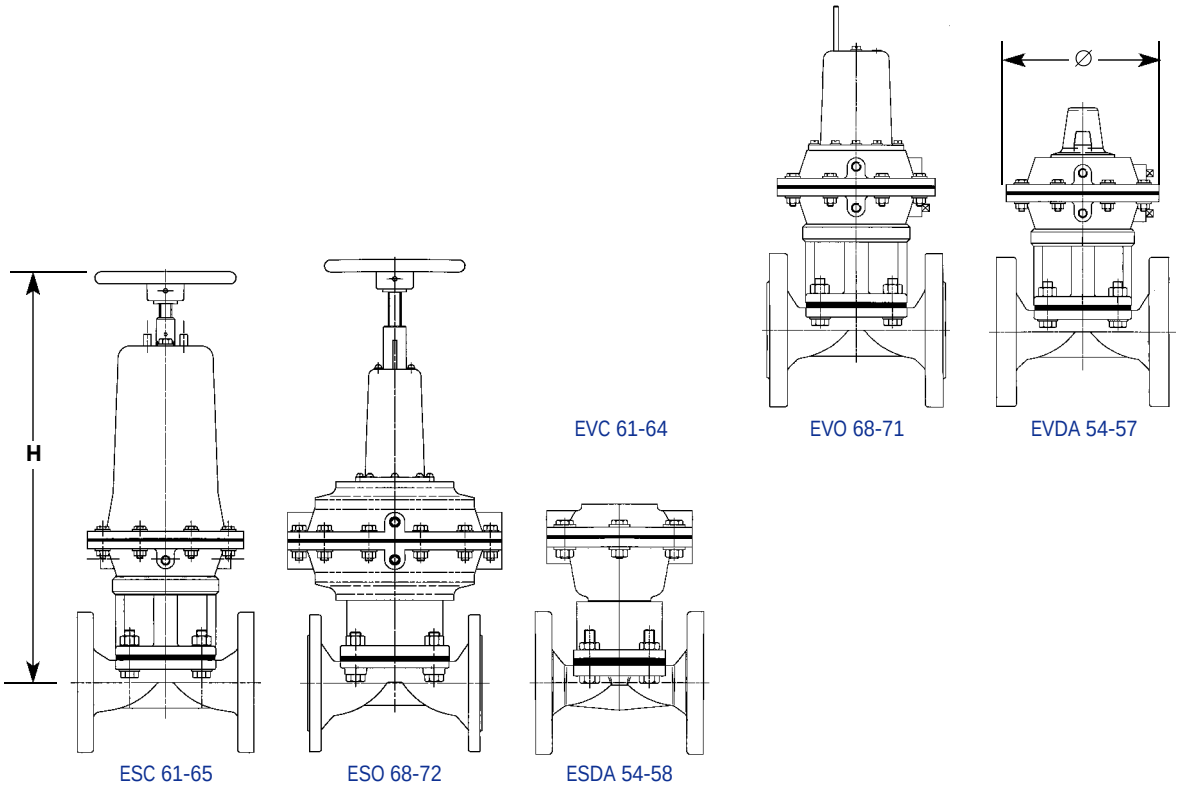

	Model	Δ	H (Type A Valve) – Size in mm												h (Type KB Valve) – Size in mm									
			15	20	25	32	40	50	65	80	100	125	150	200	25	32	40	50	65	80	100	125	150	200
Fail Safe Spring CLOSING	EV 61	168	368	376	386	–	415								457	457	457							
	ES 61	168	384	397	408	–	427								462	462	462							
	EV 62	260	–	–	464	486	491	504	516						522	522	522	547						
	ES 62	260	–	–	487	505	513	524	534						535	535	535	569						
	EV 63	318	–	–	–	–	–	617	637	653					–	–	–	687	706	736				
	ES 63	318	–	–	–	–	–	667	683	692					–	–	–	697	716	746				
	EV 64	425	–	–	–	–	–	–	–	779	820	836			–	–	–	–	806	871	918	950		
	ES 64	425	–	–	–	–	–	–	–	826	863	879			–	–	–	–	806	888	911	950		
	ES 65	549	–	–	–	–	–	–	–	–	1051	–	1131		–	–	–	–	–	–	1234	1273	1323	
Fail Safe Spring OPENING	EV 68	168	214	221	278	–	299	331							347	347	347							
	ES 68	168	255	262	371	–	407	435							427	427	427							
	EV 69	260	–	–	–	374	384	444	480	483					382	382	382	505	531					
	ES 69	260	–	–	–	450	456	555	570	582					472	472	472	595	621					
	EV 70	318	–	–	–	–	–	–	–	514	555				–	–	–	–	577	607	654			
	ES 70	318	–	–	–	–	–	–	–	619	660				–	–	–	–	667	697	744			
	EV 71	425	–	–	–	–	–	–	–	–	671	690	753		–	–	–	–	–	627	667	809		
	ES 71	425	–	–	–	–	–	–	–	–	831	846	912		–	–	–	–	–	767	809	949		
	ES 72	549	–	–	–	–	–	–	–	–	–	–	974	1040	–	–	–	–	–	–	–	995	1079	1122
DOUBLE ACTING	EV 54	168	184	196	200	–	224	233							257	257	257							
	ES 54	168	129	136	142	–	165	196							202	202	202							
	EV 55	260	–	–	–	287	303	312	327	340	377				331	331	331	346	365					
	ES 55	260	–	–	–	215	221	232	245	257	290				257	257	257	272	291					
	EV 56	318	–	–	–	–	–	–	–	360	397	412			–	–	–	–	405	440	452			
	ES 56	318	–	–	–	–	–	–	–	298	337	350			–	–	–	–	331	366	378			
	EV 57	425	–	–	–	–	–	–	–	–	437	452	519		–	–	–	–	–	458	467	489		
	ES 57	425	–	–	–	–	–	–	–	–	355	370	436		–	–	–	–	–	384	393	415		
	ES 58	549	–	–	–	–	–	–	–	–	–	–	462	530	–	–	–	–	–	–	–	–	514	537

Δ = Actuator Diameter/Width H = Actuator Height

Dimension table shows in mm diameter/width of actuators and the maximum height of the actuator from the centre of the valve flange or pipeline.